CATALOG

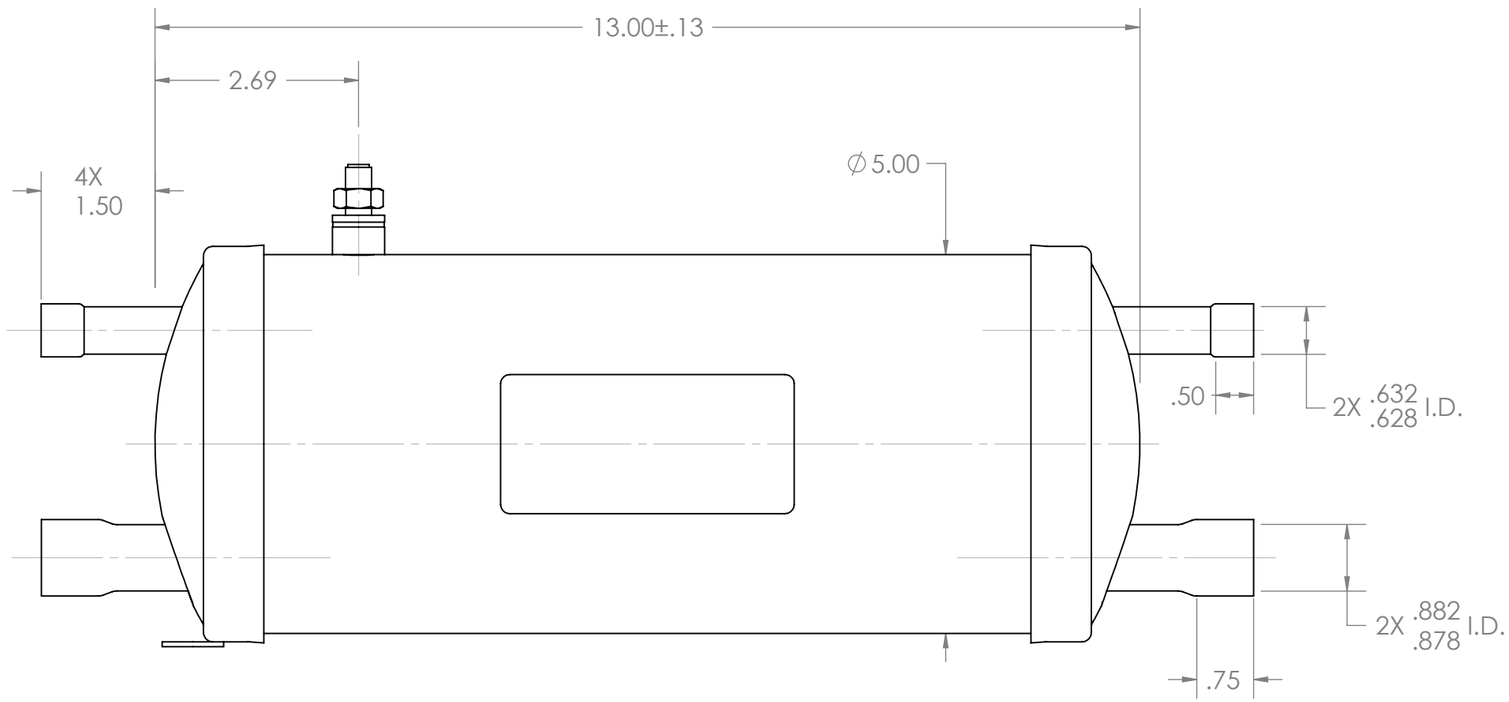

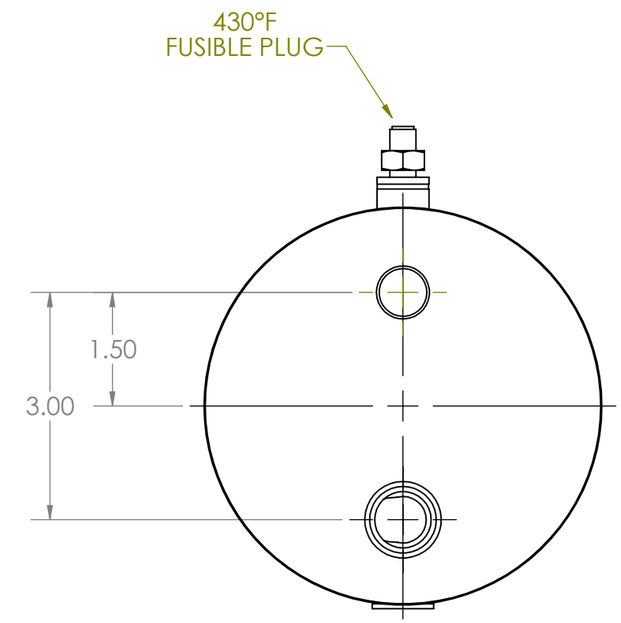

WATER FLOW

INCLUDE INSALLATION INSTRUCTIONS FOR
DESUPERHEATING HEAT EXCHANGER

NORMALLY MOUNTED IN VERTICAL POSITION WITH
GAS IN AT TOP

POWDER COAT BLACK

U.L. & C.U.L. IDENT. RR 5837
REFRIG. SIDE WP. 500 psig. WATER SIDE WP. 150 psig.
CONTROL No. 15H9 FILE No. SA6300

TOLERANCES
NOT SPECIFIED
FRACTIONS ± 1/16
DECIMALS ± .0625
ANGLES ± 2.5°

REFRIGERATION RESEARCH INC.
BRIGHTON, MICHIGAN

POINTING THE WAY

NO.	DATE	CH'D	APP'D	REVISIONS

MATERIAL

NAME
5 H.P. DESUPERHEATING HEAT EXCHANGER

DRAWN BY: MJH	SCALE 1 : 2	DRAWING NO. 5837
CHK'D JBN	DATE 01/23/13	
CUT L.	APP'D JBN	